Sink Galante Black Fumè

Flush-mount | Top-mount | Undermount

Kitchen Sinks

Code: 3780 013

DETAILS

Edge/Installation Type	Flush-mount | Top-mount | Undermount
Material	AISI 304 stainless steel
Finish	PVD
Coloring	Black
Texture	Fumé
Base	90 cm
Width	86 cm
Dimensions	860 x 520 mm
Bowl dimension	830 x 350 mm

Number of bowls	1 bowl
Built-in hole	View technical data sheet
Mixer holes	2 standard holes - 3rd hole on request
Standard fittings	Fixing hooks, gasket, drain, overflow and siphon, boxed packing
Drainer	No
Waste fitting	Drain with automatic control SPACE (PUSH)

FEATURES

ADDITIONAL HOLES AVAILABLE	The sink can be customized with the execution on request of additional holes, usable for double-hole mixers, for remote controlled drains or for the installation of soap dispensers. The positions are marked on the drawings with dotted line holes.
Deep bowls	This bowls reach an important depth, over 20 cm, thanks to the advanced production technology, that can be offer great capiency and practicity in all the washing operations.
Perimetral overflow	The overflow is always a security on the Foster sinks that prevents the overflow of water in case of oversights. The perimeter drain solution improves aesthetics thanks to its square and essential shape.
Space waste fitting	The elegant SPACE steel cap closes the drain and leaves no visible residues collected in the basket below. Space also has a small footprint and allows the optimal use of the under-sink compartment.

TECHNICAL DATA

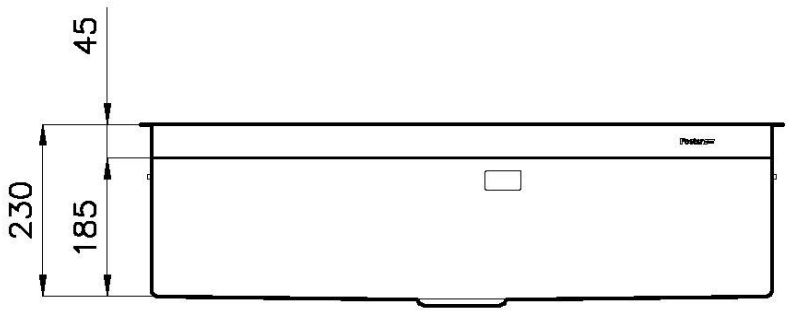
45
230
185

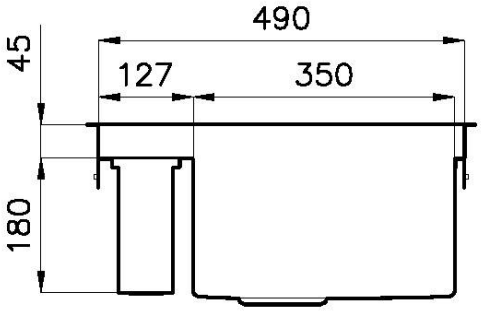
490
45
127
350
180

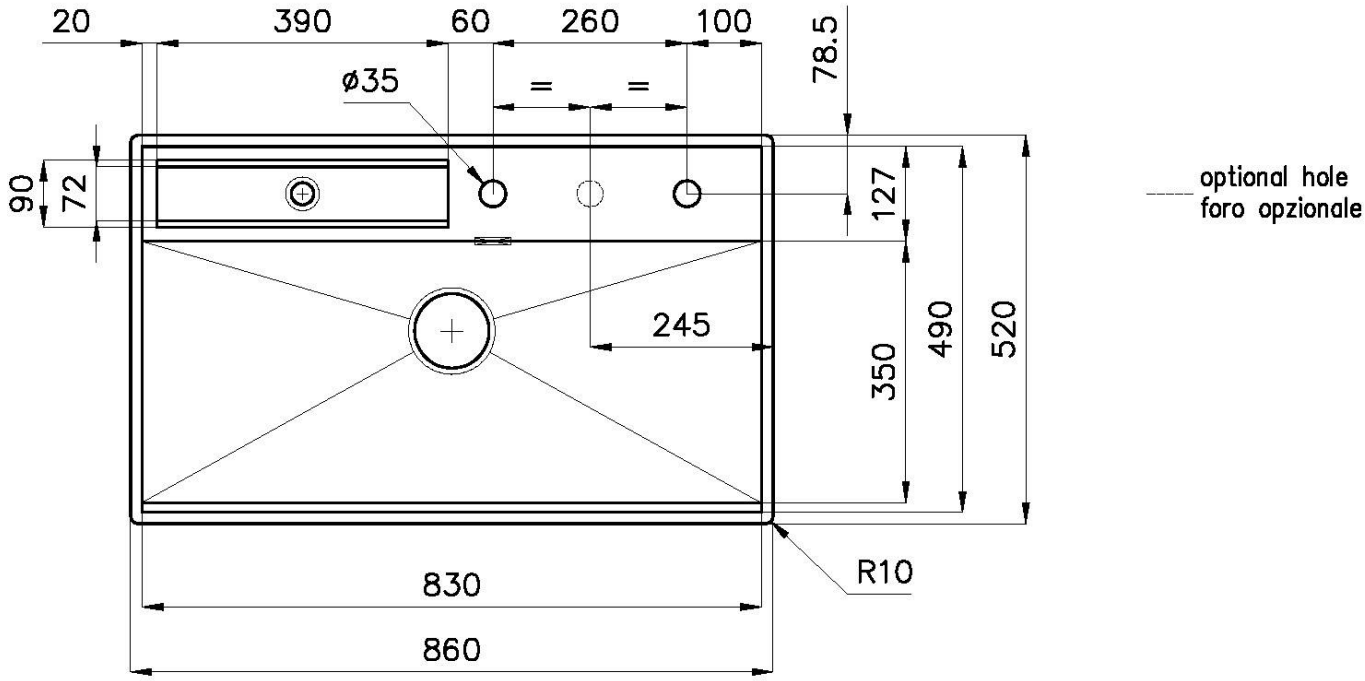
20
390
60
260
100
78.5
ø35
=
=
90
72
127
245
350
490
520
R10
830
860
optional hole
foro opzionale

Filotop

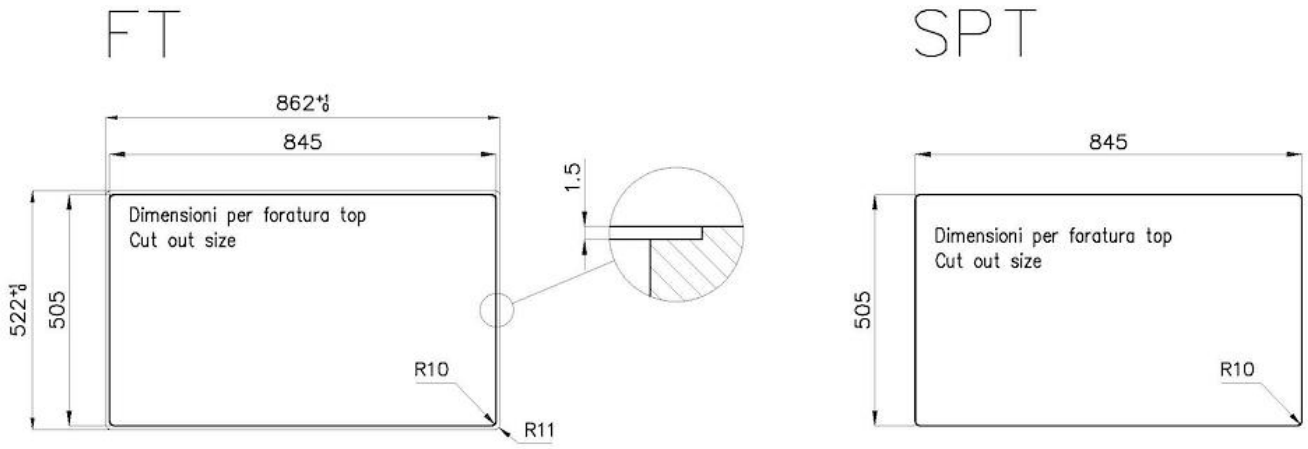

Sottotop

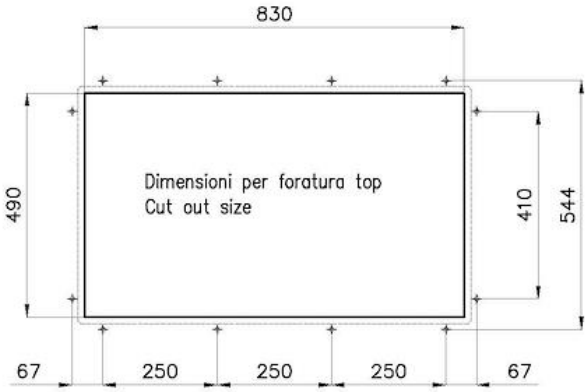

GALLERY

EQUIPMENT

Black grid
8100 618

Iroko-wood chopping board
8643 117

Space Push Gun Metal automatic waste fitting - PO
8407 120

OPTIONAL ACCESSORIES

Stainless steel perforated tray
8151 004

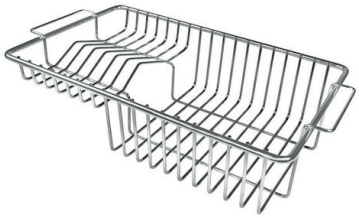

Stainless steel plate rack
8100 305

RECOMMENDED PAIRINGS

Mixer Tap Skin Gun Metal
8424 856

Mixer Tap Omega Plus Gun Metal
8498 856

Mixer Tap Omega Plus Matt Black
8498 626

OP GUN METAL satin
8499 106

Mixer Tap Margot Gun Metal
8524 006

Dispenser Evo satin Gun Metal
8520 156

Dispenser Evo Gun Metal
8520 856

OPTIONAL AUTOMATIC WASTE FITTINGS

Gun Metal automatic waste fitting - PG

8407 110