Sink Galante

Flush-mount | Top-mount | Undermount

Kitchen Sinks

Code: 3780 000

DETAILS

Edge/Installation Type	Flush-mount | Top-mount | Undermount
Material	AISI 304 stainless steel
Texture	Brushed in line
Finish	Foster brushed
Base	90 cm
Width	86 cm
Dimensions	860 x 520 mm
Bowl dimension	830 x 350 mm
Built-in hole	View technical data sheet

Standard fittings	Fixing hooks, gasket, drain, overflow and siphon, boxed packing
Mixer holes	2 standard holes - 3rd hole on request
Drainer	No
Number of bowls	1 bowl
Waste fitting	Drain with automatic control SPACE (PUSH)

FEATURES

ADDITIONAL HOLES AVAILABLE	The sink can be customized with the execution on request of additional holes, usable for double-hole mixers, for remote controlled drains or for the installation of soap dispensers. The positions are marked on the drawings with dotted line holes.
Deep bowls	This bowls reach an important depth, over 20 cm, thanks to the advanced production technology, that can be offer great capiency and practicity in all the washing operations.
Perimetral overflow	The overflow is always a security on the Foster sinks that prevents the overflow of water in case of oversights. The perimeter drain solution improves aesthetics thanks to its square and essential shape.
Space waste fitting	The elegant SPACE steel cap closes the drain and leaves no visible residues collected in the basket below. Space also has a small footprint and allows the optimal use of the under-sink compartment.

TECHNICAL DATA

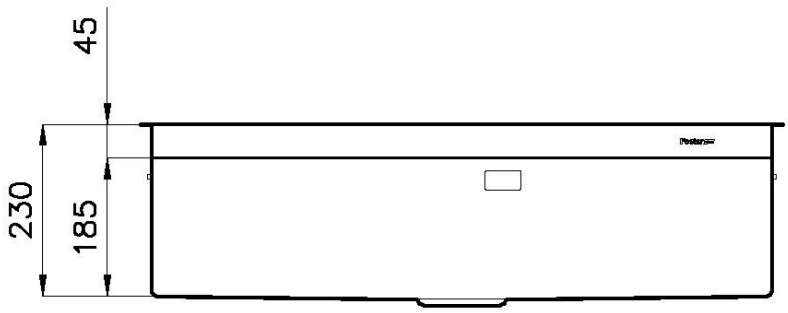
45
230
185

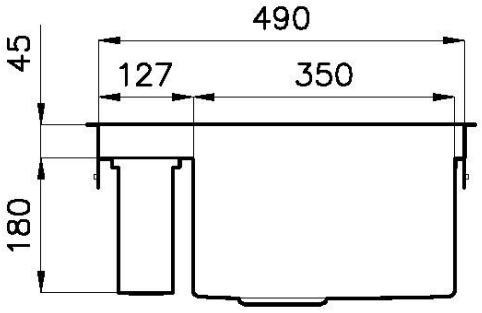
490
45
127
350
180

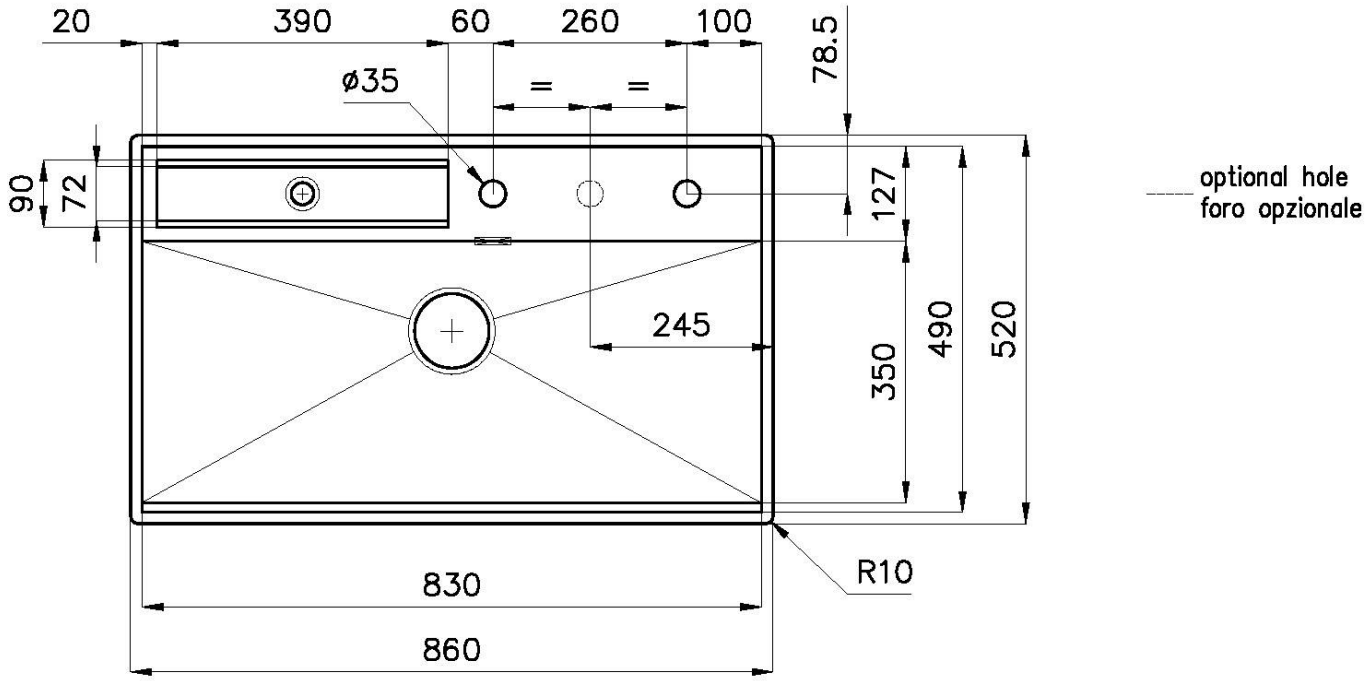
20
390
60
260
100
78.5
ø35
=
=
90
72
127
245
350
490
520
R10
830
860
optional hole
foro opzionale

3780 000
Accessories / Accessori

The "rails" system makes it possible to use a combination of numerous accessories. Grids, chopping boards, utensils' ranging system, bowls and containers of different dimensions can be alternated in the workspace with a simple gesture, and can easily be stacked, in order to be on hand at all times.

Il sistema di "corsie" rende possibile l'utilizzo combinato di innumerevoli accessori. Griglie, taglieri, portautensili, vaschette e contenitori di varie dimensioni si alternano nella zona di lavoro con un semplice gesto e possono essere impilati, sempre a portata di mano.

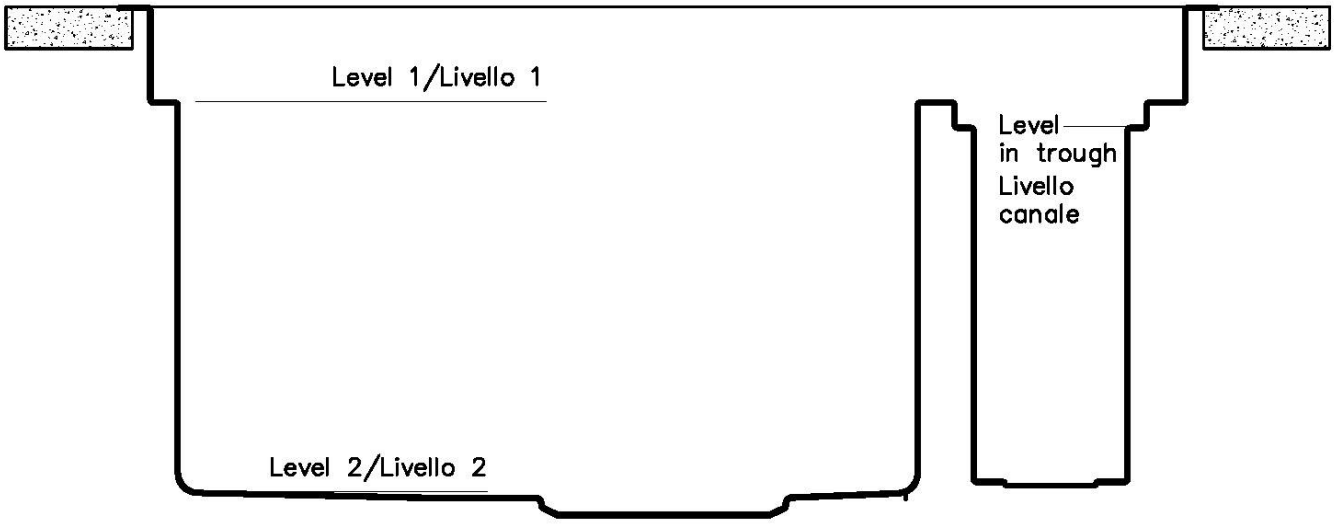

3780 000
Level 1/Livello 1

Compatible accessories/Accessori compatibili:

8100 618 (in dotazione/supplied with sink)
8643 117 (in dotazione/supplied with sink)
8100 305

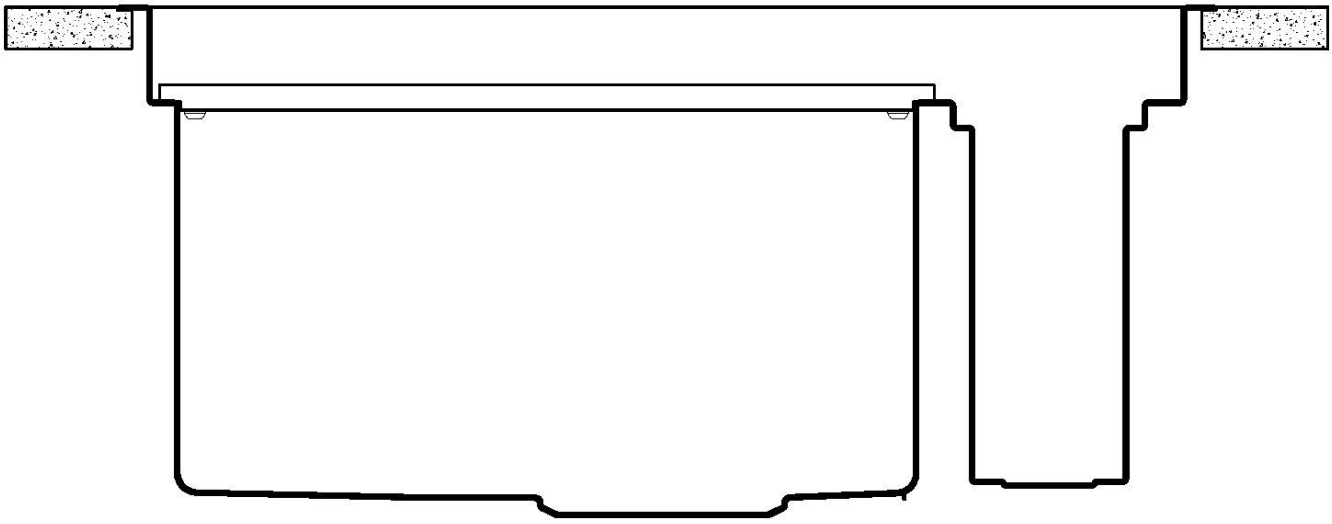

3780 000
Level 2/Livello 2

Compatible accessories/Accessori compatibili:

8100 618 (in dotazione/supplied with sink)

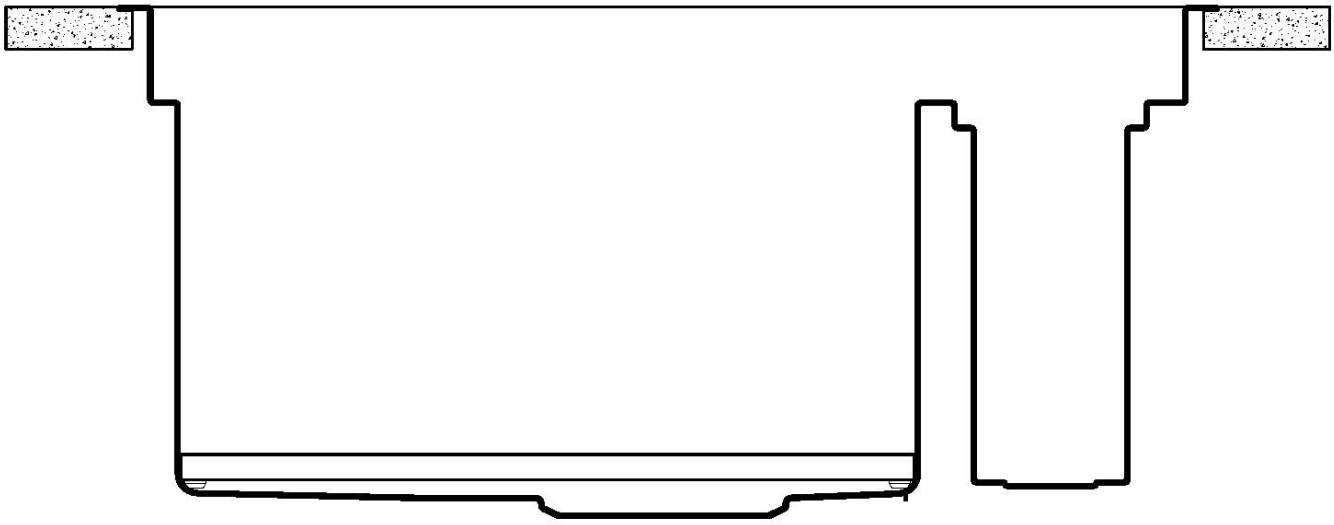

3780 000
Level "in trough"/Livello "canale"

Compatible accessories/Accessori compatibili:

8151 004

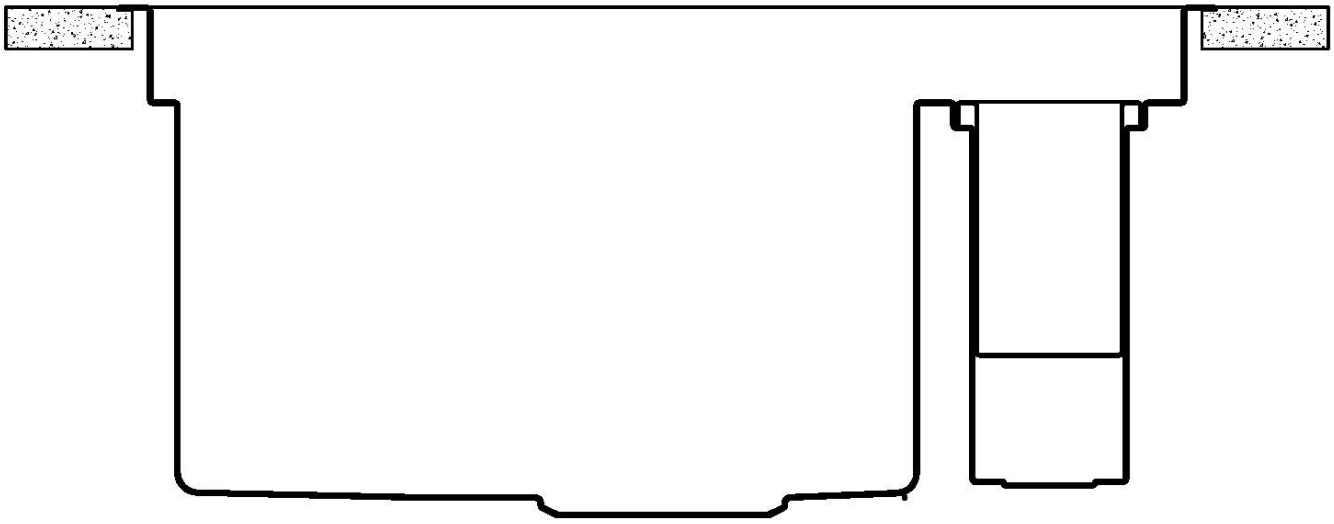

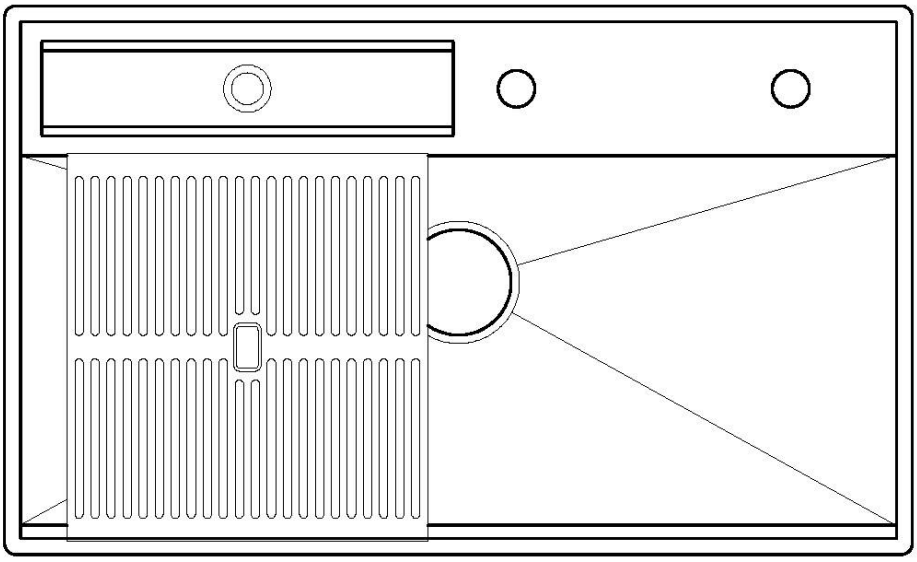

8100 618
POSIZIONATA A FILO VASCA / EDGE POSITIONING

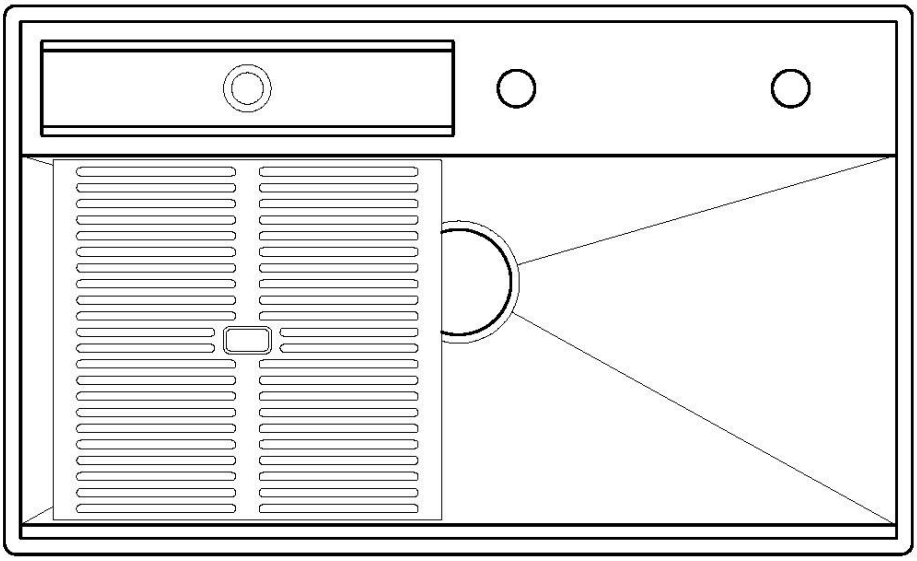

8100 618
POSIZIONATA SUL FONDO / BOTTOM POSITIONING

Filotop

FT

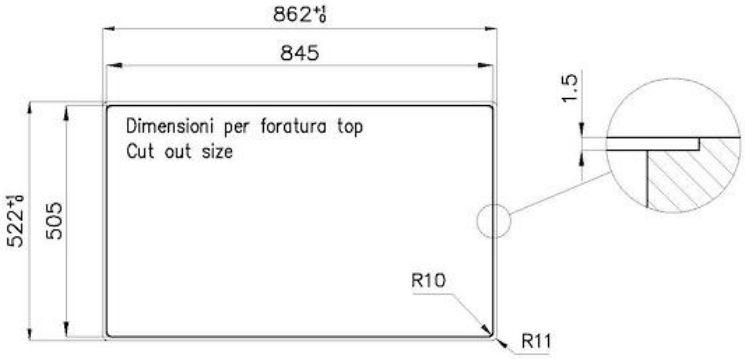

SPT

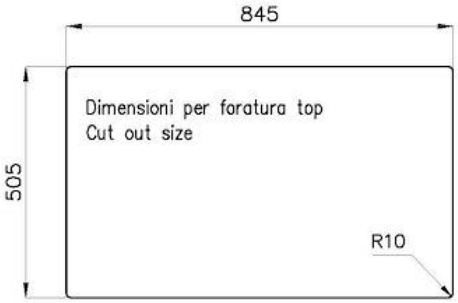

Sottotop

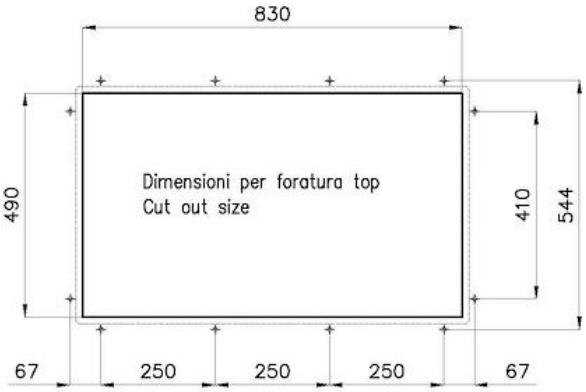

GALLERY

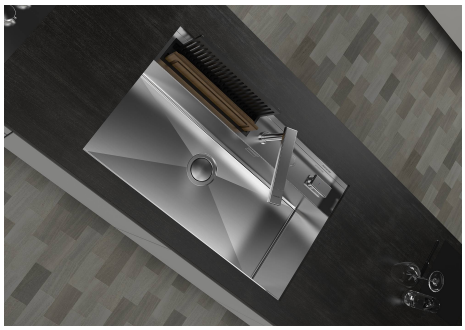

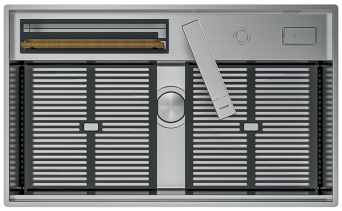

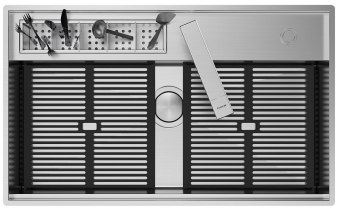

EQUIPMENT

Iroko-wood chopping board
8643 117

Black grid
8100 618

Space Push automatic waste fitting - PP
8407 116

OPTIONAL ACCESSORIES

Stainless steel perforated tray
8151 004

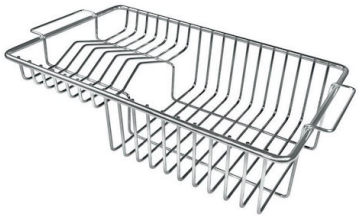

Stainless steel plate rack
8100 305

RECOMMENDED PAIRINGS

Mixer Tap Arsenio
8471 000

Mixer Tap Eclipse
8499 000

Mixer Tap Flat
8478 001

Mixer Tap Margot
8524 000

Mixer Tap Margot satin
8524 100

OPTIONAL AUTOMATIC WASTE FITTINGS

Automatic waste fitting - PM
8407 113

Space automatic waste fitting - PA
8407 108

Space automatic waste fitting - PE
8407 109

Space Light automatic waste fitting - PL
8407 117