Sink S1000

Kitchen Sinks

Code: 1886 160

DETAILS

Edge/Installation Type	Standard (8 mm Edge)
Finish	Foster brushed
Material	AISI 304 stainless steel
Texture	Foster brushed
Base	80-90 cm
Dimensions	860x500 mm
Standard fittings	Fixing hooks, gasket, drain, overflow and siphon, boxed packing
Mixer holes	1 standard hole
Built-in hole	840x480 mm

Drainer	No
Width	86 cm
Bowl dimension	360x400mm
Number of bowls	2 bowls
Waste fitting	3,5" drain

FEATURES

Sliding brackets	
Added value	Foster uses steel thicknesses higher than those used on average by other manufacturers. This is how, thanks to our long experience, we know how to make sinks of superior quality and with a better resistance to aging.
Basket 3,5" waste fitting	The drain is equipped with a large 3.5" drain, with the practical basket cap that prevents the discharge of solid parts.

TECHNICAL DATA

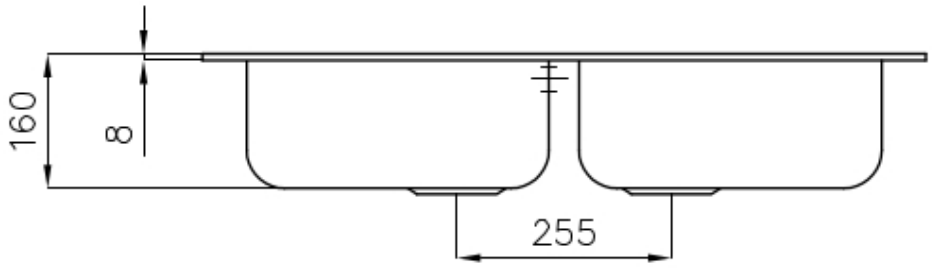

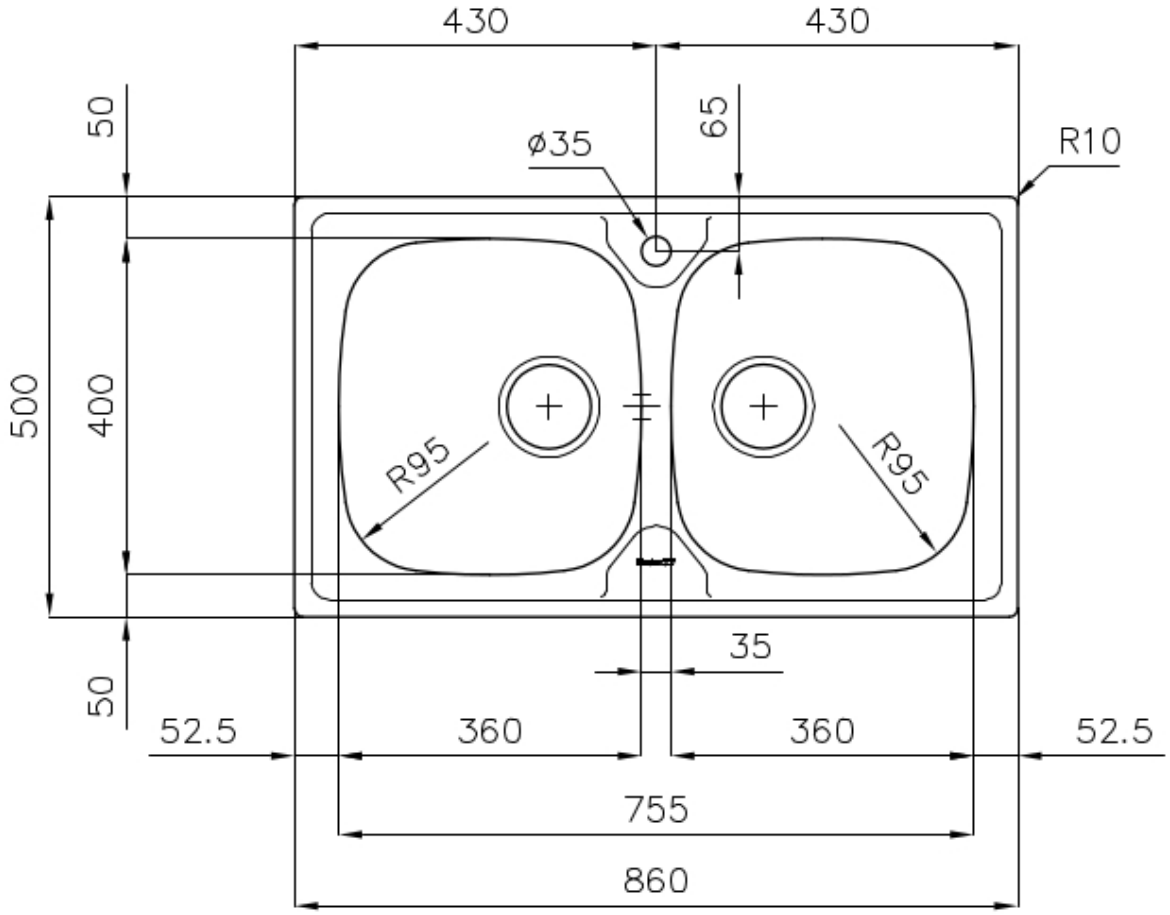

OPTIONAL ACCESSORIES

HPDE Chopping board
8657 001

Iroko-wood sliding chopping board
8643 000

Stainless steel basket
8611 000

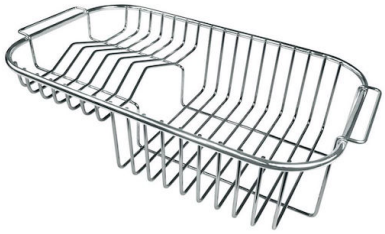

Stainless steel plate rack
8100 301

RECOMMENDED PAIRINGS

Mixer Tap Lorenzo
8466 000

Mixer Tap S1000 - RO
8443 002