Sink GK

Kitchen Sinks

Code: 1403 000

DETAILS

Edge/Installation Type	Flush-mount | Top-mount
Finish	Foster brushed
Material	AISI 304 stainless steel
Texture	Brushed in line
Base	60 cm
Dimensions	580x480 mm
Standard fittings	Fixing hooks, gasket, drain, overflow and siphon, boxed packing
Mixer holes	2 standard holes
Built-in hole	View technical data sheet

Drainer	No
Width	58 cm
Bowl dimension	450x400mm
Number of bowls	1 bowl
Waste fitting	Drain with automatic control SPACE

FEATURES

Double mixer hole	The large tap counter is already fitted with a series of 2 tap holes. In the second hole it is possible to install the remote control of the automatic drain or, alternatively, a practical soap dispenser.
Diamond-shape bottom	The draining of water is an important feature in a sink, and it's always taken good care of in Foster products. In the bent-welded sinks, which would have a flat bottom, the proper draining is guaranteed by the elegant beveling, which helps the water flow.
Inclined recess	A deep and inclined recess houses the burners and grigs, allowing to create a single work surface. The inclination also makes it extremely easy to clean the edges.
High thickness	1mm thick steel. A significant thickness, which guarantees the maximum sturdiness and durability.
Automatic waste fitting	The waste-fitting with round remote knob is supplied; a practical accessory which makes it unnecessary to get wet in order to drain the water from the bowl.
Space waste fitting	The elegant SPACE steel cap closes the drain and leaves no visible residues collected in the basket below. Space also has a small footprint and allows the optimal use of the under-sink compartment.
Squared bowls - 0/9 radius	The square bowls of Foster have perfectly squared vertical edges, while those on the bottom have a small radius of 9 mm that facilitates cleaning operations.

Save space system	Drain and siphon are designed to leave as much space as possible in the under-sink area, more and more useful today theseparate waste collection systems.
Perimetral overflow	The overflow is always a security on the Foster sinks that prevents the overflow of water in case of oversights. The perimeter drain solution improves aesthetics thanks to its square and essential shape.

TECHNICAL DATA

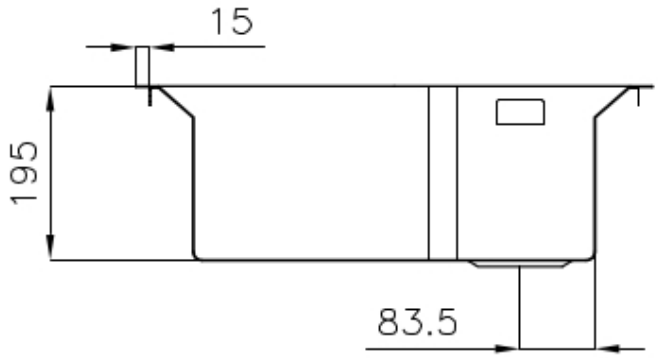

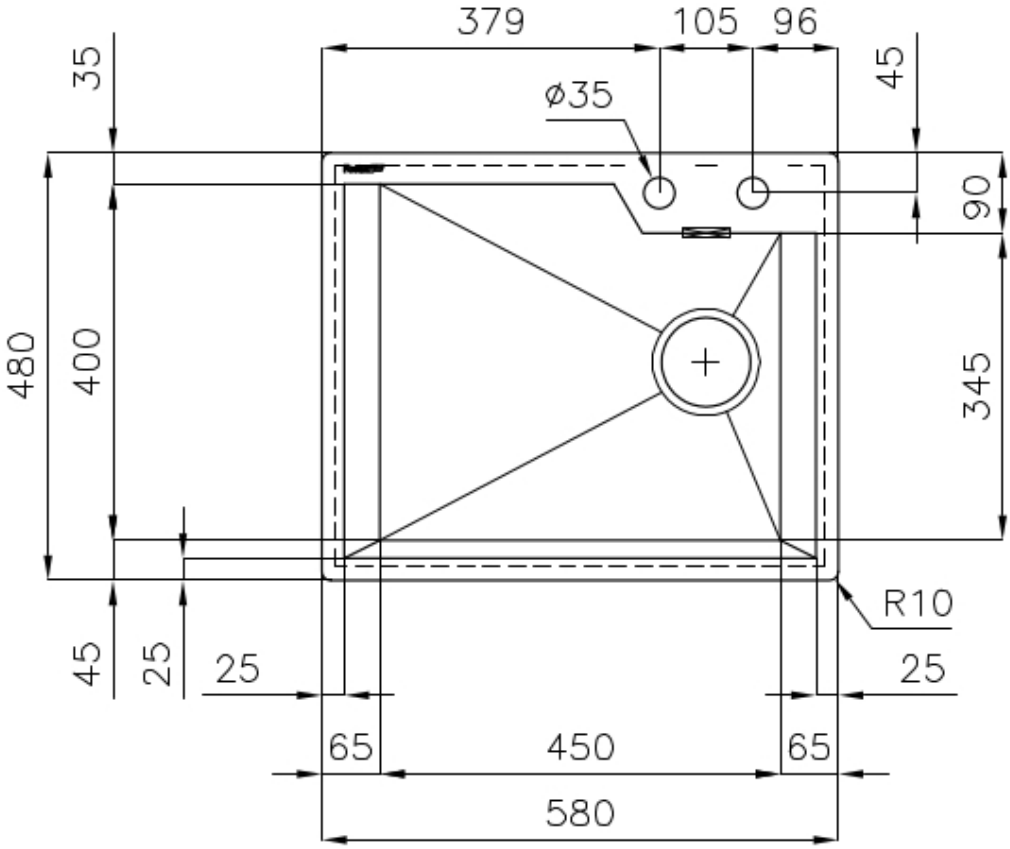

Lavello serie GK cod. 1403/000

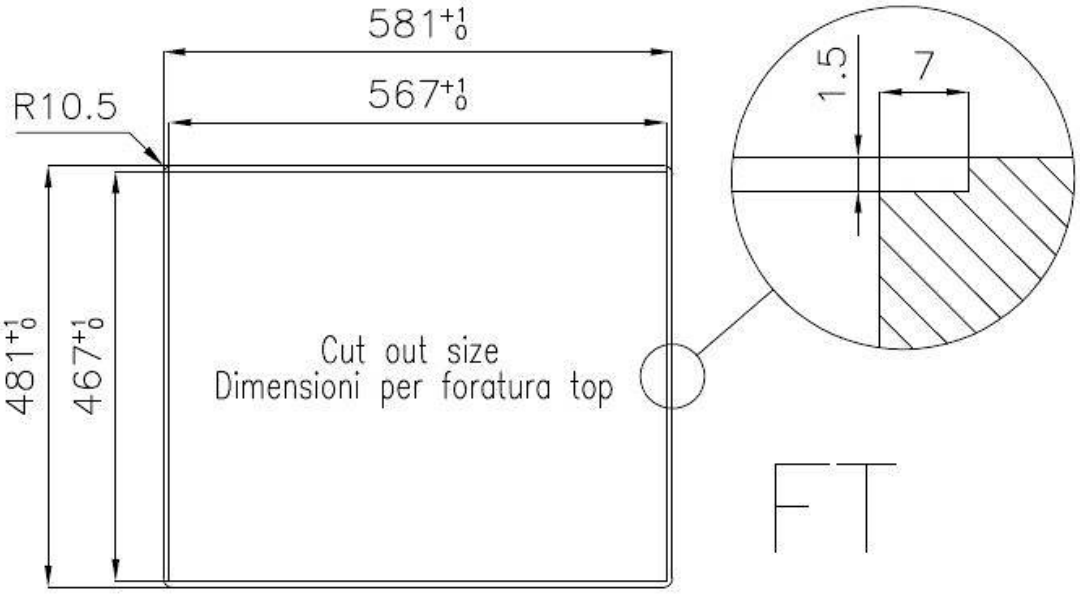

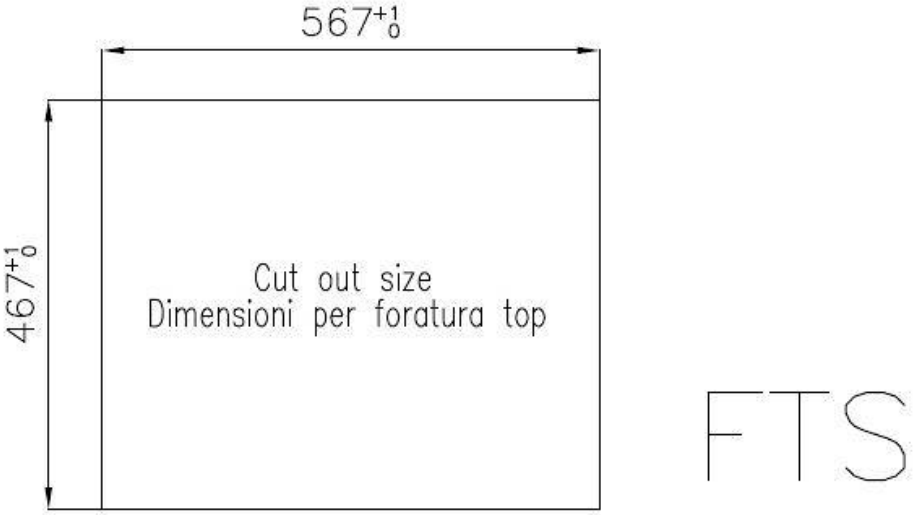

GALLERY

EQUIPMENT

Space automatic waste fitting
8407 108

OPTIONAL ACCESSORIES

Graters kit with ring-holder and food collection tray
8159 101

HPDE twin chopping board
8644 100

Iroko-wood sliding chopping board
8656 001

Stainless steel perforated tray
8151 000

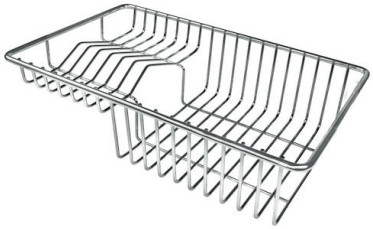

Stainless steel plate rack
8100 303

RECOMMENDED PAIRINGS

Mixer Tap GK
8488 000